DETAILS NEW

EC frameless DT 38 S, Ø42 mm, brushless, 110 W | Dynamic Torque

Part number 814370

PRICE SCALES	Quantity	Price per unit
Prices excluding VAT and shipping costs	1-4	**€251.99**
	5-19	**€215.26**
	20-49	**€194.31**
	from 50	**On request**

Start combination

Order quantity 1

Add to cart

Specifications Description Downloads

Specifications

TECHNICAL ILLUSTRATIONS

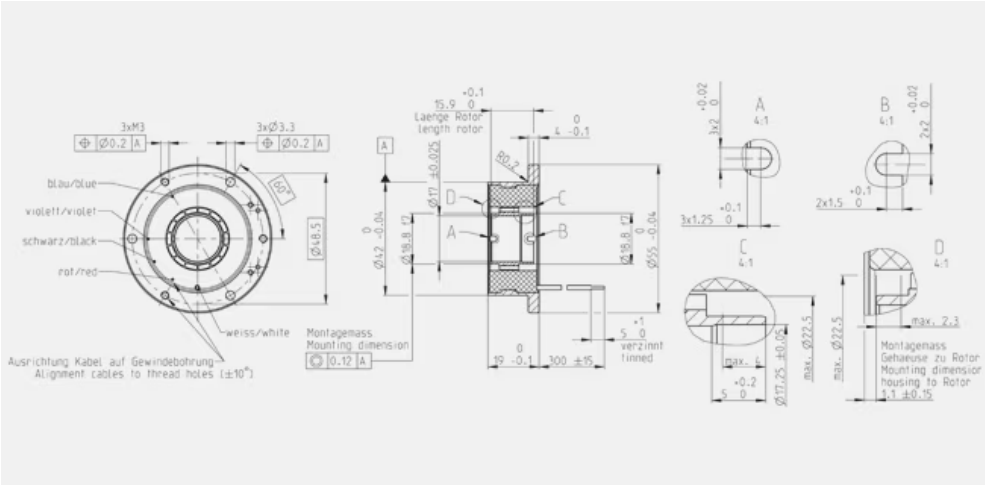

Dimension drawing

Information: Drawings are not to scale.

VALUES AT NOMINAL VOLTAGE	
Nominal voltage	24 V
No load speed	12400 rpm
No load current	261 mA
Nominal speed	10100 rpm
Nominal torque (max. continuous torque)	96.8 mNm
Nominal current (max. continuous current)	4.81 A

Stall torque	641 mNm
Stall current	89.9 A
Max. efficiency	89 %
CHARACTERISTICS	
Terminal resistance	0.267 Ω
Terminal inductance	0.182 mH
Torque constant	18.2 mNm/A
Speed constant	524 rpm/V
Speed / torque gradient	7.68 rpm/mNm
Mechanical time constant	0.981 ms
Rotor inertia	12.2 gcm²
THERMAL DATA	
Thermal resistance housing-ambient	7.28 K/W
Thermal resistance winding-housing	0.6 K/W
Thermal time constant winding	4.46 s
Thermal time constant motor	451 s
Ambient temperature	-40...+100 °C
Max. winding temperature	+155 °C
MECHANICAL DATA	
Max. speed	15000 rpm
OTHER SPECIFICATIONS	
Number of pole pairs	7
Number of phases	3
PRODUCT	
Weight	125 g

OPERATING RANGE

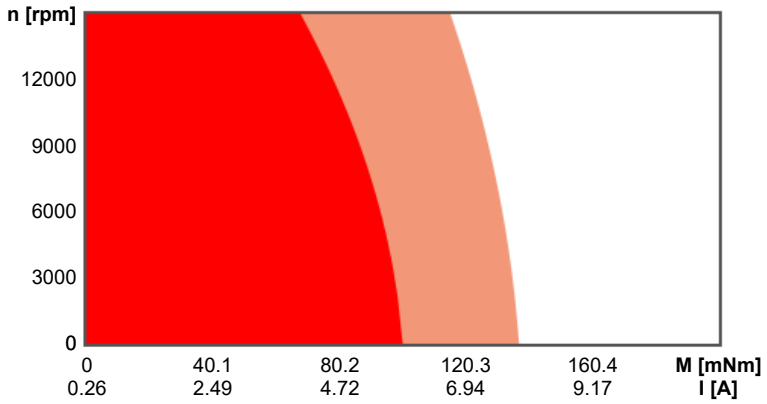

Continuous operation range

Short term operation range

Description

The EC frameless DT motors are BLDC motor kits with internal-rotor technology. The rotor and stator are delivered separately, without bearings or motor shaft, and are connected only during assembly. The flat design, the high torques, and a lot of space for cable glands allow a high level of integration into your application.

Downloads

CAD-FILES (STEP)

CAD model (STEP) (ZIP 4 MB)	Version 2024

MANUALS

GERMAN

Montageanleitung (deutsch, PDF 9 MB)	Version 2025

ENGLISH

Installation Manual (english, PDF 9 MB)	Version 2025

CATALOG PAGE

Catalog page (english, PDF 67 KB)	Version 2025

OTHER

EC frameless DT brochure (english, PDF 2 MB)	Version 2025

Videos

Add to wish list | Make a request | Send to a colleague | Print specifications

Selecting, combining, and configuring drive systems

Short delivery times for custom drives

Extensive product specifications and software

Product support

+41 (41) 666 18 00

Shopping made easy

Product selection

Shipping

Delivery

Payment

Payment options

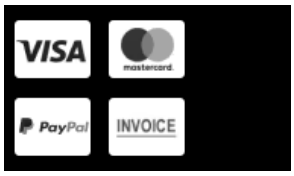

Knowledge

Find out more about the interaction of motor, gearhead, sensors, and controller.

Knowledge & e-learning